Criticality Workshop (Instructor Copy)

Instructor Note:

This exercise will give participants an opportunity to:

- *develop a criticality ranking for the listed assets by assigning probability of failure (POF) and consequence of failure (COF) rankings*
- *plot the various assets on a POF/COF chart to visualize their criticality analysis*

This workshop is designed to be done in groups of least two people, though three or more participants per group is preferred to promote discussion In Part 1 of the workshop, Current State of the Assets, participants will use lessons learned during the Current State of the Assets module to evaluate the inventory and develop and apply a condition rating scale to certain inventory assets. In Part 2 of the workshop, Criticality, participants will evaluate probability of failure (POF) and consequence of failure (COF), assign POF and COF ratings, a criticality score, and then plot all of the scored assets on a POF/COF grid.

The system schematic, asset inventory table, POF rating structure and COF rating structure are included in this packet. The 4 icons on the right-hand side of the system schematic represent (from top to bottom) the school cafeteria, the bathroom, the drinking fountain outside the bathroom, and the irrigation system for the school grounds.

Part 2: Criticality

Instructions: In Part 2 of the workshop participants will assign a probability of failure (POF) and consequence of failure (COF) rating to each valve. These ratings will be based off example POF and COF rating structures that the instructor provides. POF and COF ratings have already been given to the other assets as examples. Participants will then calculate the criticality score of each asset by multiplying the POF and COF ratings. Participants will plot each criticality score on the Asset Criticality Grid.

Step 1: Use the Asset Inventory table (page 4) along with the condition ratings created in Part 1 of this exercise to assess the probability of failure and consequence of failure of each valve. Using the POF/COF rating structures provided by the instructor (page 5 and 6), participants should assign a POF rating (1-5) and a COF rating (1-5) to each valve. Participants should write the POF and COF ratings in the Asset Inventory table in the right-

hand column titled Ratings. *Note:* POF and COF ratings have already been given to the other assets in the table to save time and also to serve as examples.

***Instructor note**: Participants may say they need more information to assign POF/COF ratings. This can prompt a conversation about what information participants would like to have to accurately assign POF/COF ratings. Do they collect that information for their system? If not, why?*

Step 2: Once all assets have a POF and COF rating, participants should calculate the criticality score of each asset. As a reminder, the criticality score is the POF rating multiplied by the COF rating. The criticality score is the overall risk score of the asset. Participants should write the criticality score of each asset in the Asset Inventory table in the right-hand column titled Ratings.

Step 3: Once a criticality score has been assigned to each asset, the severity of the risk can be visualized on a weighted color gradient grid (page 7). Participants should plot each criticality score on the grid. To plot the criticality score on the grid, participants should make a dot representing the criticality score on the grid and write the name of the asset next to the dot.

When plotting the criticality score, participants need to pay close attention to the x-axis and y-axis. The x-axis represents POF ratings, and the y-axis represents COF ratings. Participants need to make sure they are plotting each criticality score using the correct axes. For example, an asset with a POF of 2 and a COF of 4 has a criticality score of 8. When plotting that criticality score on the grid, participants need to find the 2 on the x-axis (the POF axis) and the 4 on the y-axis (the COF axis). Where the 2 and the 4 cross on the grid is where participates should place a dot and the asset's name.

***Instructor note**: If the exercise is being done online rather than in-person, download the pdf of the Asset Criticality Grid and share your screen so participants can see the grid. The instructor should ask participants where each criticality score should appear on the grid. Instructors can use the "Fill & Sign" tool to plot an X on the grid representing criticality score and type out the asset name.*

Instructors should talk through what each color section of the grid represents once the assets are plotted. For example, assets with high criticality scores – those most likely to fail with high consequences - fall into the red zone in the upper right-hand corner of the grid. These assets will be the system's highest priority. These assets should be targeted for early replacement or rehabilitation, prior to the asset failing. These assets represent events the system does not want to occur and it is worth sacrificing some asset life to prevent the failure.

SOUTHWEST ENVIRONMENTAL FINANCE CENTER

School Water System Schematic

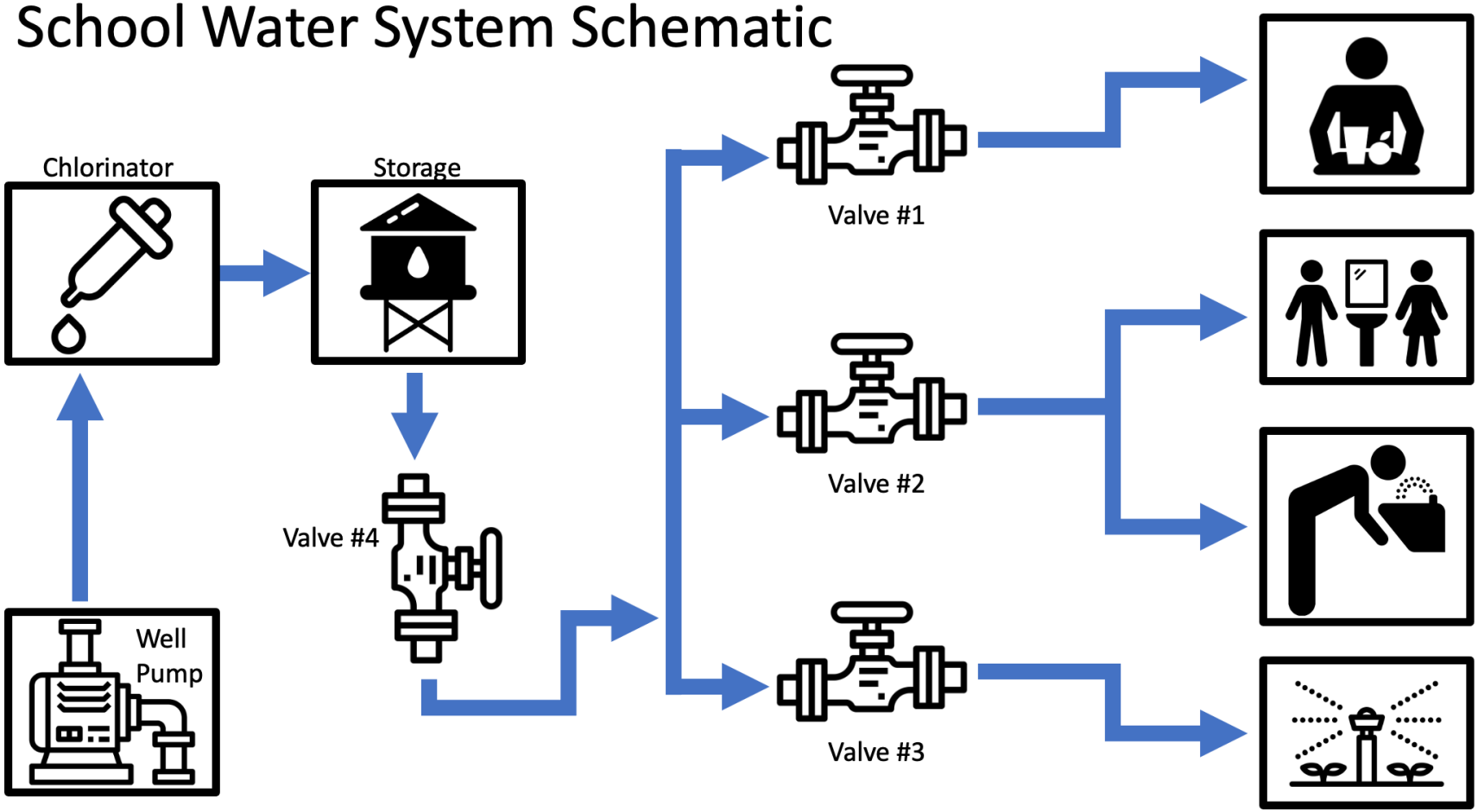

SOUTHWEST ENVIRONMENTAL FINANCE CENTER

Asset Inventory Table:

Asset ID	Type	Size	Install Date	Comments	Spare on hand	Replacement Cost	Ratings
Valve #1	Gate Valve	3”	2000	Last Exercised 6/2020: difficult to open and close;	No	$700	Condition: POF: COF: Criticality Score:
Valve #2	Gate Valve	3”	2019	Last Exercised 6/2020: no deficiency noted	No	$700	Condition: POF: COF: Criticality Score:
Valve #3	Gate Valve	2”	1990	Last Exercised 6/2020: jammed in half open position	Yes	$425	Condition: POF: COF: Criticality Score:
Valve #4	Gate Valve	3”	1985	Last Exercised 6/2020: Could not close completely	No	$700	Condition: POF: COF: Criticality Score:
Drinking Fountain	Elkay EZ H2O with bottle filler		2019	Drinking fountain/bottle filling station. Intermittent repairs required in 2020 on bottle filler portion of fountain.	No	$1200	Condition: 2 POF: 2 COF: 2 Criticality Score:
Pipe Section 1	PVC	3” x 100 ft	1990	No known breaks to date	No		Condition: 2 POF: 1 COF: 4 Criticality Score:
Well Pump	Sta-Rite L6TS115-50	6”/ 115 GPM	6/2000	Major repairs in 2018 and 2020	No	$3000	Condition: 4 POF: 4 COF: 5 Criticality Score:
Chlorinator Pump	Stenner E20PHG81S715G1	16 GPD	10/2016	04/2021: Performed routine maintenance; No obvious signs of wear; prior chlorinator pump lasted 4 years;	Yes	$1200	Condition: 3 POF: 2 COF: 5 Criticality Score:
Storage Tank	Bolted Steel	150,000 Gal	1985	Last inspection 5/2010, no deficiency noted	No		Condition: 2 POF: 2 COF: 5 Criticality Score:

SOUTHWEST ENVIRONMENTAL FINANCE CENTER

Example Probability of Failure (POF) Rating Structure

Rating	Description
1	Asset is brand new or like new. Failure not anticipated within the foreseeable future.
2	Asset is not brand new, but shows no more than cosmetic signs of wear and tear. Asset failure is not anticipated in the near future. The asset receives regular maintenance.
3	Asset shows signs of concern but has not yet entered a potential failure state. Asset has the potential to be maintained for some period of time if the proper maintenance is completed and repairs are made. Asset may show light rust, some light wear and tear, be nearing but not at physical capacity.
4	Asset is in potential failure, but not functional failure mode. Functional failure not expected within the next year (if so, should be POF of 5). Potential failure means the asset is showing signs of failure, such as cracks, root intrusions, vibration, noise, excessive rust, but is still delivering all or most of the required service. The potential failure issues will need to be addressed to prevent a functional failure.
5	Already in functional failure mode (Mortality – already broken, collapsed; Level of Service - not doing what it's supposed to; Capacity – Not sufficiently sized; Financial Inefficiency – costing too much to continue to use) or expected to be in functional failure mode within 1 year.

SOUTHWEST ENVIRONMENTAL FINANCE CENTER

Example Consequence of Failure (COF) Rating Structure

Rating	Description
1	No identifiable consequences. Minor repair costs. No significant impact on delivery.
2	Minor repair costs. Short term disruption to traffic or water turned off in part of the building (less than 2 hours).
3	Moderate repair costs. Disruption to traffic. Disruption to staff or regular operations. Water turned off in part of the building (less than 4 hours).
4	Damage to other assets and/or private property. Potential to negatively harm the environment or wildlife. Expensive repair costs. Water shut off and school cancelled for the day. May make some minor news report.
5	Health and safety of employees and/or public at risk. Politically problematic/becomes a major news story. Water shut off and school cancelled for more than one day. Expensive repair costs.
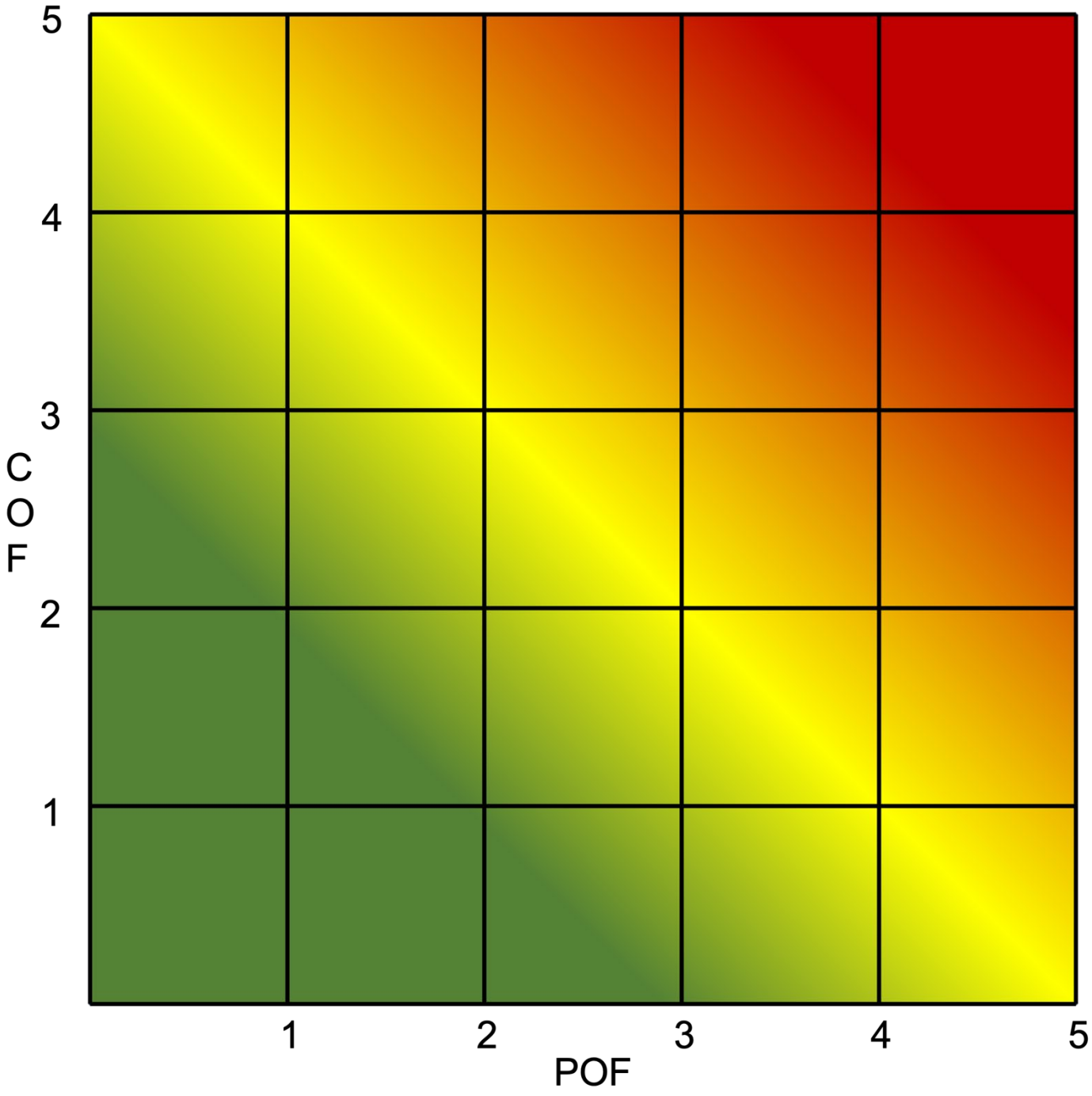
Asset Criticality Grid